DATASHEET

Top View LEDs
61-236-ICRQHGRBYC-A05-ET-CS

Features

- P-LCC-6 package.
- Inner reflector and white package.
- Colorless clear resin
- Wide viewing angle 120o.
- White SMT package.
- Soldering methods: IR reflow soldering.
- Pb-free.
- The product itself will remain within RoHS compliant version.
- Compliance with EU REACH.
- Compliance Halogen Free .(Br<900ppm,Cl<900ppm,Br+Cl<1500ppm).

Description

The 61-236-IC is a 3-channels LED driver with 8 bit PWM linear control. The 61-236-IC uses a single communication wire to identify LED PWM signal and in total 24bit RGB display. This is a very simple and cost effective for any LED model design.
Due to the package design, 61-236 has wide viewing angle, and low power consumption. The mixture of blue LEDs, green LEDs and red LEDs results in a white emission. And makes it ideal for light pipe application.
The LED PWM output controlled by duty ration which depends on the 24 bit data each package. All package will latch new data when DIN port received the reset signal. (>50us low-level signal)

Applications

- Indoor / Outdoor LED video display
- Full color LED light strip
- LED decorative lighting
- Gaming Exterior

Copyright © 2010, Everlight All Rights Reserved. Release Date : 25.Feb.2020 Issue No: DSE-0020968
Ver.:5 Release Date:03/04/2020 狀態:Approved(正式發行)

Device Selection Guide

Type	Chip Materials	Emitted Color	Resin Color
RQH	AlGaInP	Brilliant Red	Water Clear
GR	InGaN	Brilliant Green	Water Clear
BY	InGaN	Brilliant Blue	Water Clear

Absolute Maximum Ratings (Ta=25℃)

Parameter	Symbol	Rating	Unit
Power supply voltage	Vdd	4.2-5.5	V
Output Voltage	Vout	17	V
Input voltage	Vin	-0.5~Vdd+0.5	V
LED Output Current	Iout	5	mA
Operating Temperature	T_{opr}	-25 ~ +85	℃
Storage Temperature	Tstg	-40 ~ +90	℃
ESD	ESD	2000	V
Soldering Temperature	T_{sol}	Reflow Soldering : 260 ℃ for 10 sec. Hand Soldering : 350 ℃ for 3 sec.	

Electro-Optical Characteristics (Ta=25℃)

Parameter	Symbol	Type	Min.	Typ.	Max.	Unit	Condition
Luminous Intensity	Iv	RQH	90	-----	280	mcd	I_F=5mA
		GR	280	-----	900		
		BY	71	-----	224		
Viewing Angle	$2\theta_{1/2}$		-----	120	-----	deg	
Dominant Wavelength	λd	RQH	617.5	-----	629.5	nm	
		GR	525	-----	540		
		BY	462	-----	474		

Notes:
1. Tolerance of Luminous Intensity: ±11%
2. Tolerance of Dominant Wavelength: ±1nm

Copyright © 2010, Everlight All Rights Reserved. Release Date : 25.Feb.2020 Issue No: DSE-0020968
Ver.:5 Release Date:03/04/2020 狀態:Approved(正式發行)

Electrical Characteristics (Ta=-20~+70°C, Vdd=4.5~5.5V, Vss=0V)

Parameter	Symbol	Min.	Typ.	Max.	Unit	Condition
Output Current	IOL		5		mA	---
Input current	I_I	---	---	±1	μA	VI=Vdd/Vss
Input Voltage	V_{IH}	3.3	---	---	V	Din, SET
	V_{IL}	---	---	0.3Vdd	V	Din, SET
Hysteresis Voltage	V_H	---	0.35	--	V	Din, SET
Dynamic Current Dissipation	IDD_{dyn}	---	2.5	--	mA	

Data transfer time

T0H	0 code, high voltage time	0.30 μs	±80ns
T1H	1 code, high voltage time	0.90 μs	±80ns
T0L	0 code, low voltage time	0.90 μs	±80ns
T1L	1 code, low voltage time	0.30 μs	±80ns
RES	Low voltage time	Above 50μs	---

Timing Wave Form：

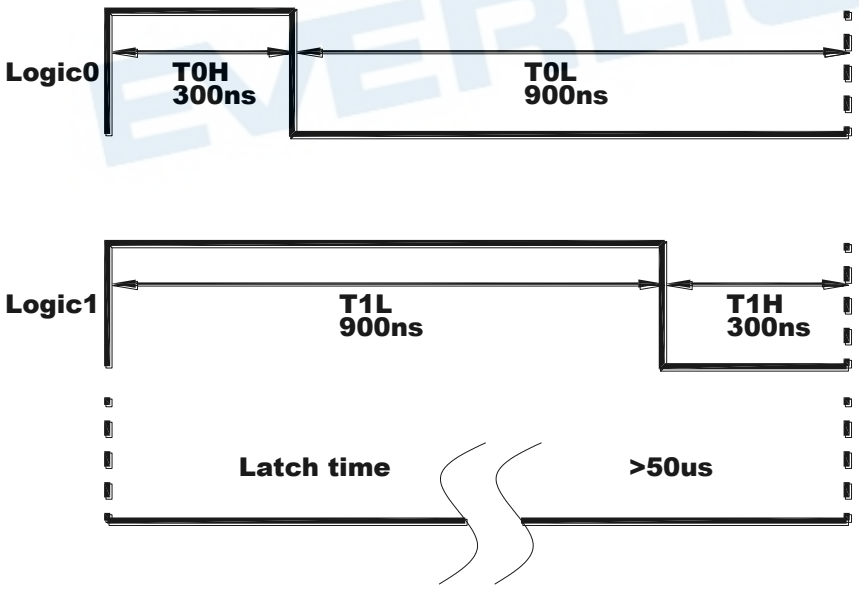

Copyright © 2010, Everlight All Rights Reserved. Release Date : 25.Feb.2020 Issue No: DSE-0020968
Ver.:5 Release Date:03/04/2020 狀態:Approved(正式發行)

Data Communication：

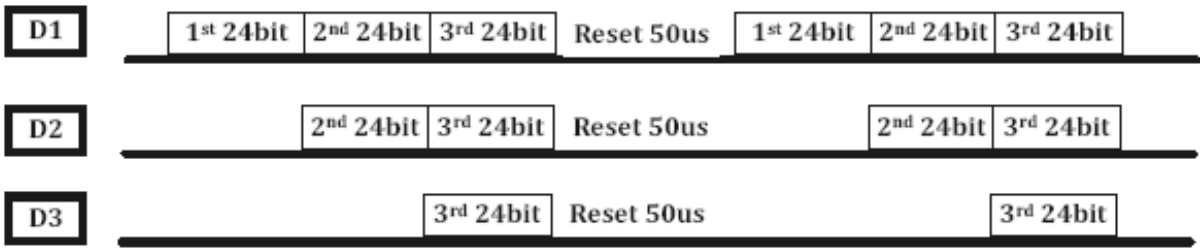

Single Data in 24bit for RGB：

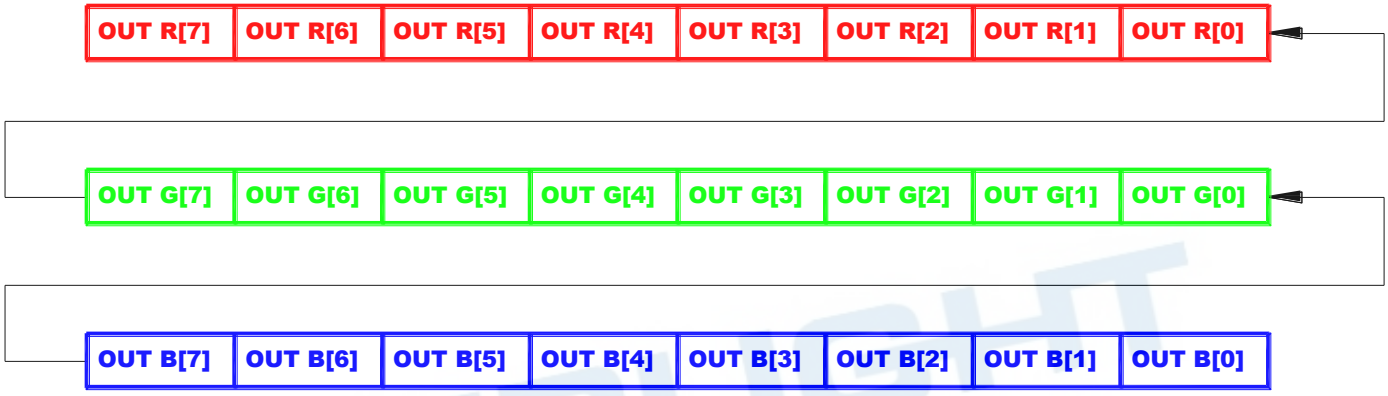

5V Application circuit：

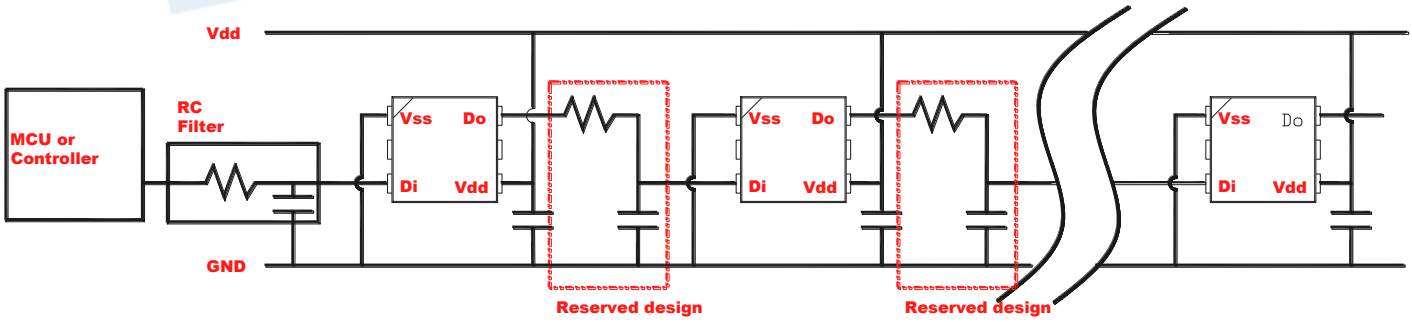

Copyright © 2010, Everlight All Rights Reserved. Release Date : 25.Feb.2020 Issue No: DSE-0020968
Ver.:5 Release Date:03/04/2020 狀態:Approved(正式發行)

Typical Electro-Optical Characteristics Curves

Typical Curve of Spectral Distribution

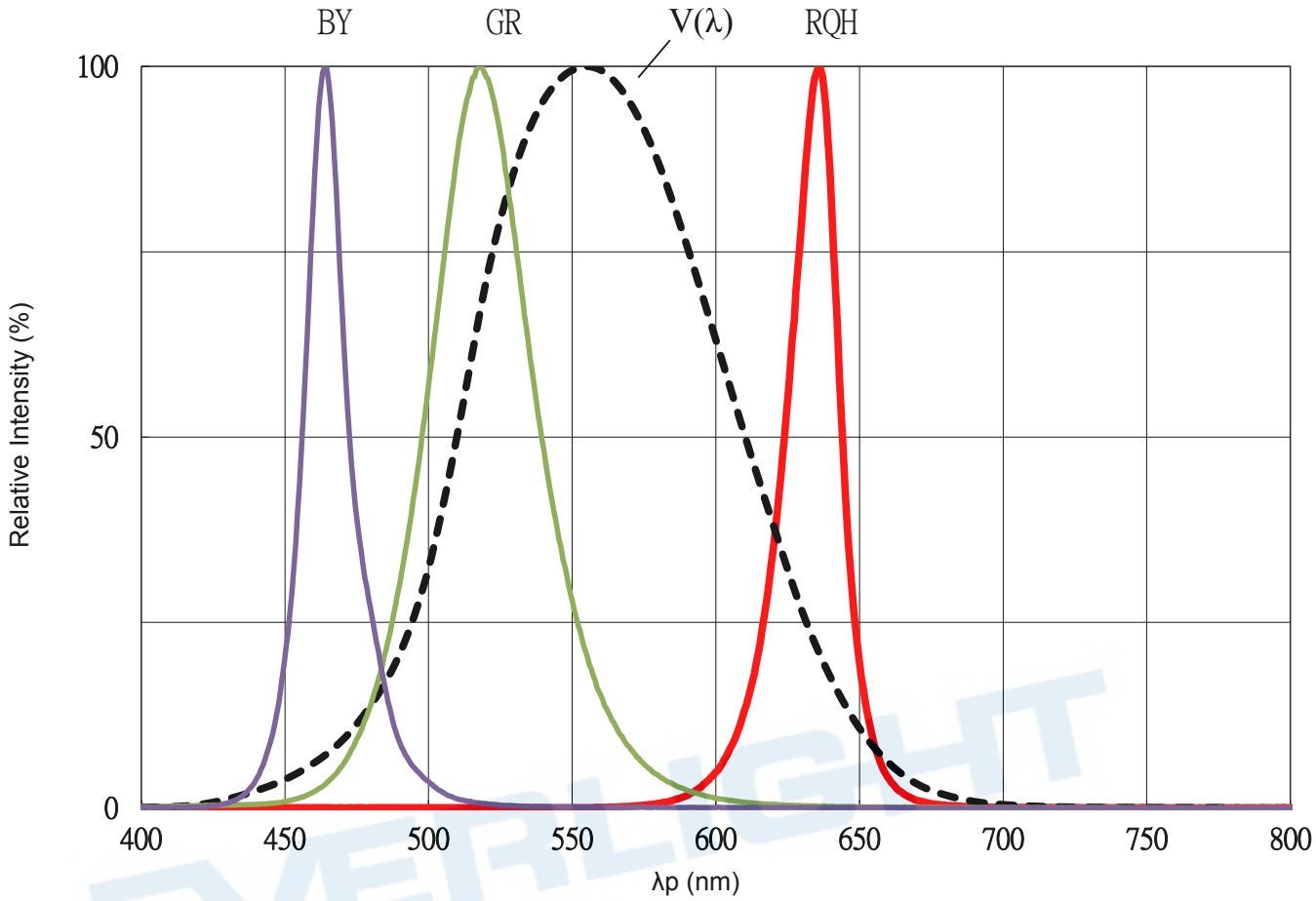

Note: V(λ)=Standard eye response curve;

Diagram Characteristics of Radiation

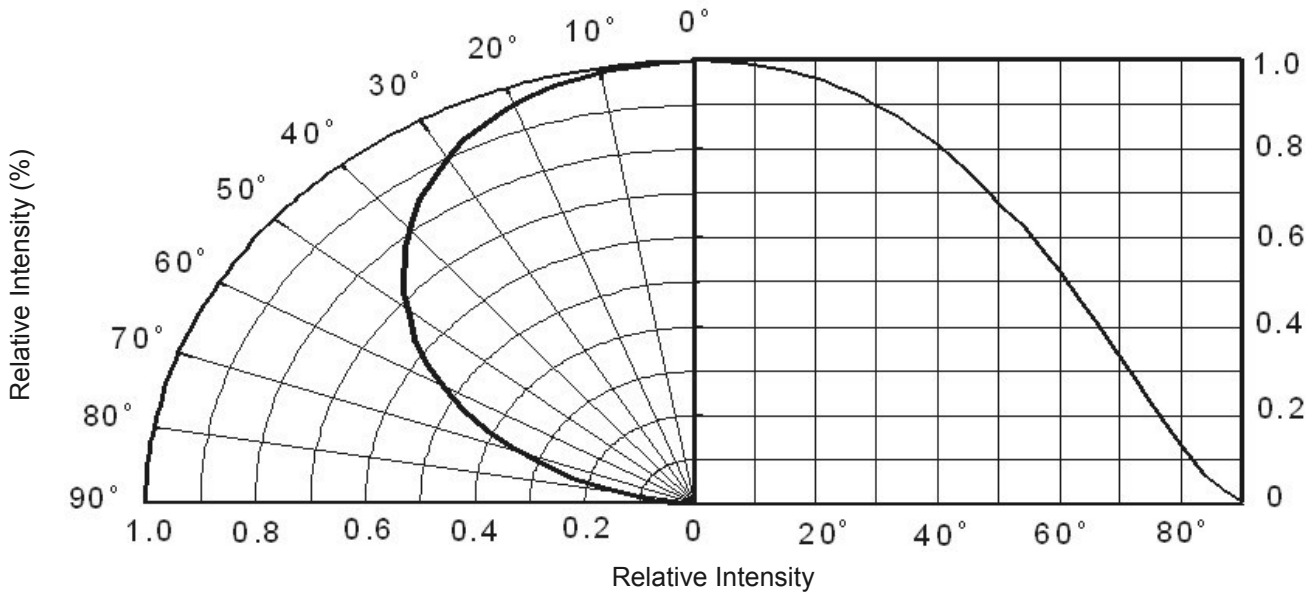

Copyright © 2010, Everlight All Rights Reserved. Release Date : 25.Feb.2020 Issue No: DSE-0020968
Ver.:5 Release Date:03/04/2020 狀態:Approved(正式發行)

Package Dimension

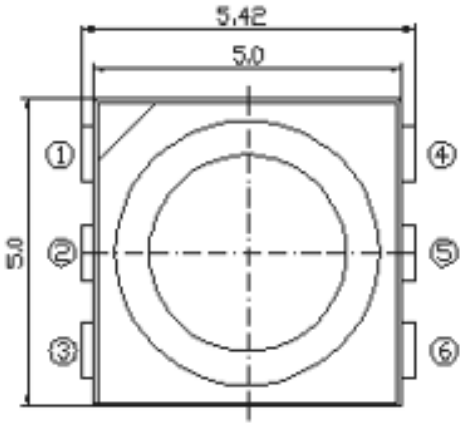

1. Vss
2. NA
3. Di
4. Do
5. NA
6. Vdd

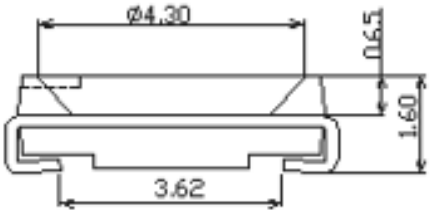

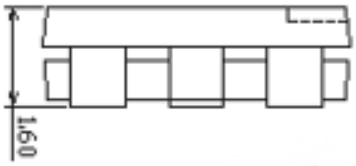

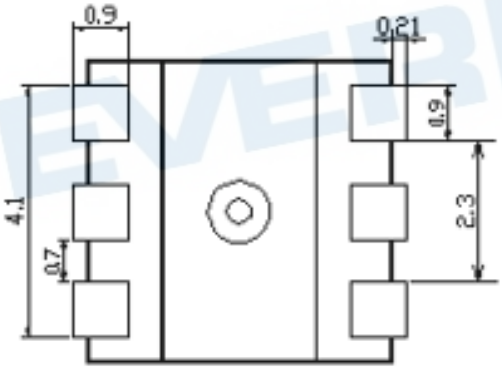

Recommend solding pad design

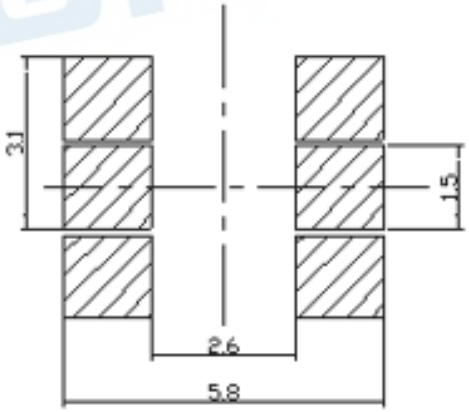

PIN Configuration

NO.	Symbol	Function description
1	Vss	Ground
2	NA	NA
3	Di	Control data signal input
4	Do	Control data signal output
5	NA	NA
6	Vdd	Power supply control circuit

Note: Tolerances unless mentioned ±0.1mm. Unit = mm

Copyright © 2010, Everlight All Rights Reserved. Release Date : 25.Feb.2020 Issue No: DSE-0020968
Ver.:5 Release Date:03/04/2020 狀態:Approved(正式發行)

Moisture Resistant Packing Materials

- CPN: Customer's Product Number
- P/N: Product Number
- QTY: Packing Quantity
- CAT: Luminous Intensity Rank
- HUE: Dominant Wavelength Rank
- REF: Forward Voltage Rank
- LOT No: Lot Number

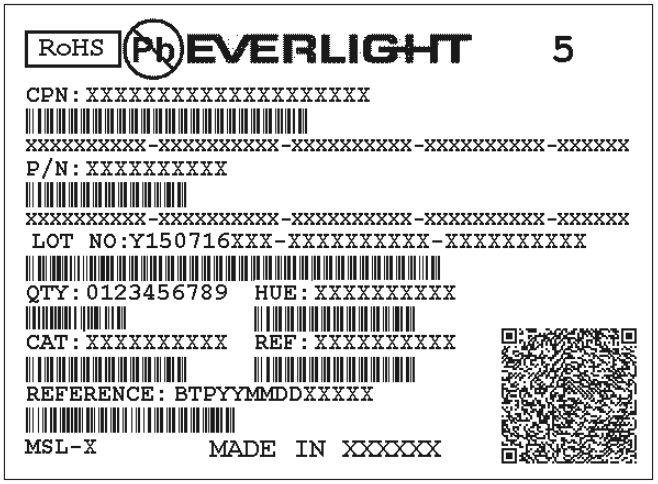

Reel Dimensions

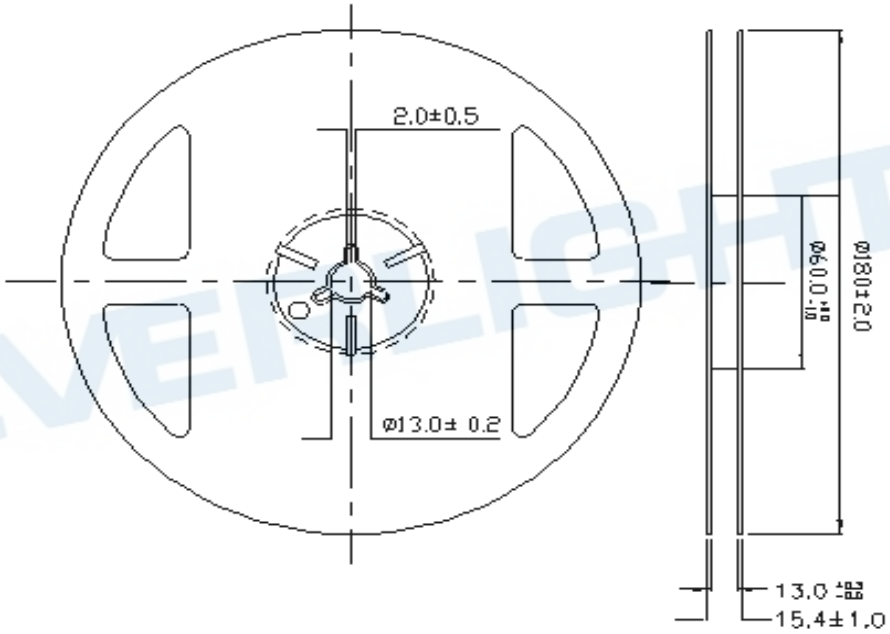

Copyright © 2010, Everlight All Rights Reserved. Release Date : 25.Feb.2020 Issue No: DSE-0020968
Ver:5 Release Date:03/04/2020 狀態:Approved(正式發行)

Carrier Tape Dimensions: Loaded Quantity 800 pcs Per Reel

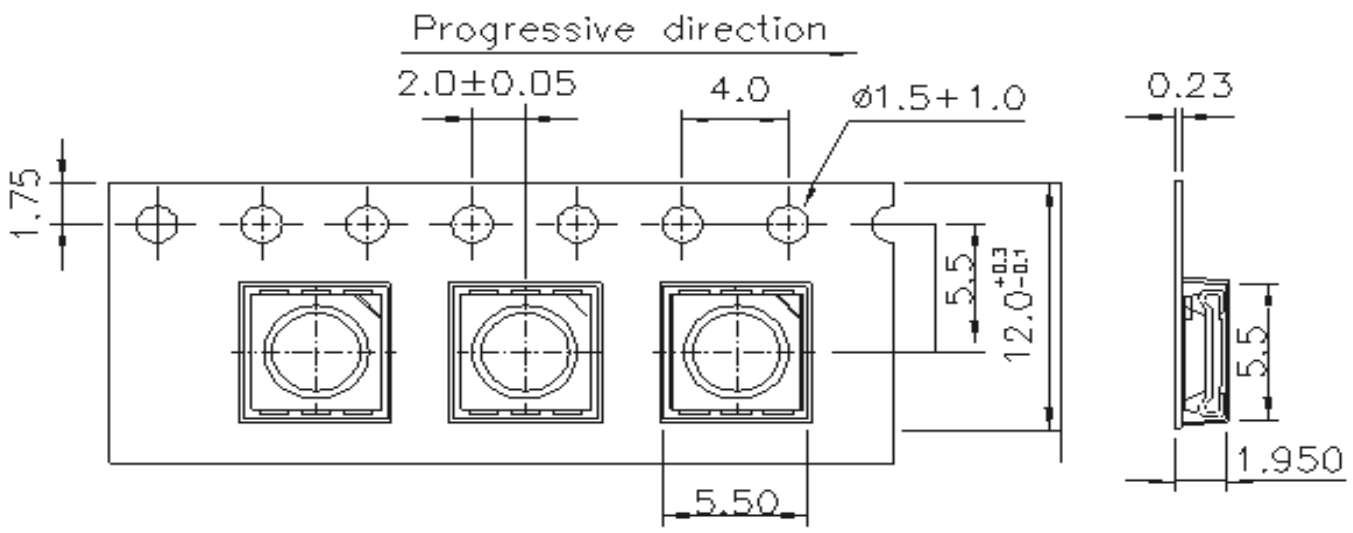

Note: Tolerances unless mentioned ±0.1mm. Unit = mm

Moisture Resistant Packing Process

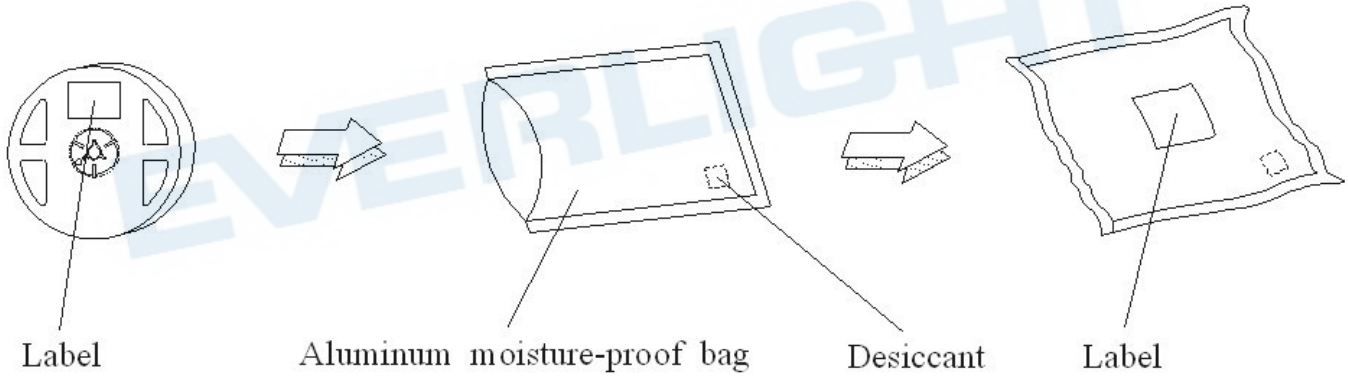

Note: Tolerances unless mentioned ±0.1mm. Unit = mm

Copyright © 2010, Everlight All Rights Reserved. Release Date : 25.Feb.2020 Issue No: DSE-0020968
Ver.:5 Release Date:03/04/2020 狀態:Approved(正式發行)

Precautions for Use

1. Over-current-proof

   1.1 Customer must apply resistors for protection, otherwise slight voltage shift will cause big current change (Burn out will happen).

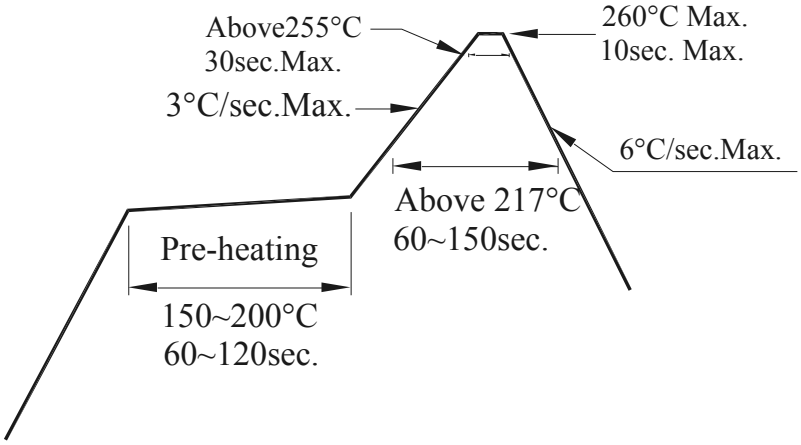

2. Storage

   2.1 Do not open moisture proof bag before the products are ready to use.
   2.2 Before opening the package: The LEDs should be kept at 30℃ or less and 90%RH or less.
   2.3 If the moisture absorbent material (silica gel) has faded away or the LEDs have exceeded the storage time, baking treatment should be performed using the following conditions.
   Baking treatment : 60±5℃ for 24 hours.
   2.4 It is recommended to solder the LED as soon as possible after unpacking the aluminum envelop, But in case that the LED have to be left unused after unpacking envelop again is requested.
   The LED should be soldering within 24 hours after opening the package.
   If baking is required, A baking treatment should be performed as follows:
   60℃±5℃ for more than 24 hours.

3. Soldering Condition

   3.1 Pb-free solder temperature profile
   3.2 Reflow soldering should not be done more than two times.
   3.3 When soldering, do not put stress on the LEDs during heating.
   3.4 After soldering, do not warp the circuit board.

4. Soldering Iron

   Each terminal is to go to the tip of soldering iron temperature less than 350℃ for 3 seconds within once in less than the soldering iron capacity 25W. Leave two seconds and more intervals, and do soldering of each terminal. Be careful because the damage of the product is often started at the time of the hand solder.

5. Repairing

   Repair should not be done after the LEDs have been soldered. When repairing is unavoidable, a double-head soldering iron should be used (as below figure). It should be confirmed beforehand whether the characteristics of the LEDs will or will not be damaged by repairing.

Copyright © 2010, Everlight All Rights Reserved. Release Date : 25.Feb.2020 Issue No: DSE-0020968
Ver:5 Release Date:03/04/2020 狀態:Approved(正式發行)

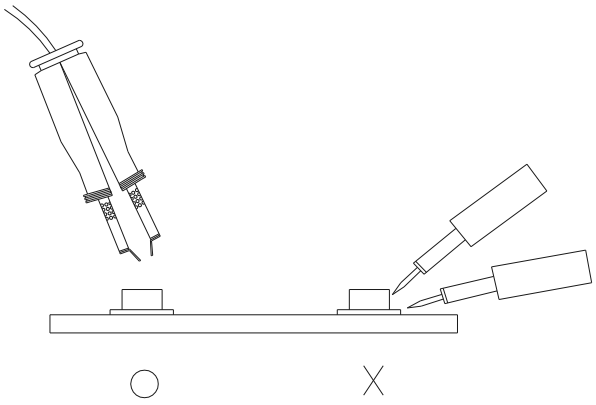

Copyright © 2010, Everlight All Rights Reserved. Release Date : 25.Feb.2020 Issue No: DSE-0020968
Ver.:5 Release Date:03/04/2020 狀態:Approved(正式發行)

Application Restrictions

High reliability applications such as military/aerospace, automotive safety/security systems, and medical equipment may require different product. If you have any concerns, please contact Everlight before using this product in your application. This specification guarantees the quality and performance of the product as an individual component. Do not use this product beyond the specification described in this document.

DISCLAIMER

1. EVERLIGHT reserves the right(s) on the adjustment of product material mix for the specification.
2. The product meets EVERLIGHT published specification for a period of twelve (12) months from date of shipment.
3. The graphs shown in this datasheet are representing typical data only and do not show guaranteed values.
4. When using this product, please observe the absolute maximum ratings and the instructions for using outlined in these specification sheets. EVERLIGHT assumes no responsibility for any damage resulting from the use of the product which does not comply with the absolute maximum ratings and the instructions included in these specification sheets.
5. These specification sheets include materials protected under copyright of EVERLIGHT. Reproduction in any form is prohibited without obtaining EVERLIGHT's prior consent.
6. This product is not intended to be used for military, aircraft, automotive, medical, life sustaining or life saving applications or any other application which can result in human injury or death. Please contact authorized Everlight sales agent for special application request.

Copyright © 2010, Everlight All Rights Reserved. Release Date : 25.Feb.2020 Issue No: DSE-0020968

Ver.:5 Release Date:03/04/2020 狀態:Approved(正式發行)