INolux 5050 RGB LED
4-Pin With Integrated IC
IN-PI554FCH

DISCLAIMER 3
PRODUCT SPECIFICATIONS 4
ATTENTION: ELECTROSTATIC DISCHARGE (ESD) PROTECTION 4
LABEL SPECIFICATIONS 5
FEATURES 6
LED CHARACTERISTICS 7
RECOMMENDED OPERATING RANGES 7
SWITCHING CHARACTERISTICS 8
PACKAGE OUTLINE DIMENSION & PIN CONFIGURATION 9
PIN DESCRIPTION 9
ABSOLUTE MAXIMUM RATINGS 10
FUNCTIONAL DESCRIPTION 10
TIMING WAVEFORMS 11
CONSTANT CURRENT CHARACTERISTIC 13
TYPICAL APPLICATION CIRCUIT DIAGRAM 14
LED PERFORMANCE GRAPH 15
PRECAUTIONS 16
REVISION HISTORY 19

DISCLAIMER

INOLUX reserves the right to make changes without further notice to any products herein to improve reliability, function or design. INOLUX does not assume any liability arising out of the application or use of any product or circuit described herein; neither does it convey any license under its patent rights, nor the rights of others.

LIFE SUPPORT POLICY

INOLUX's products are not authorized for use as critical components in life support devices or systems without the express written approval of the President of INOLUX or INOLUX CORPORATION. As used herein:

1. Life support devices or systems are devices or systems which, (a) are intended for surgical implant into the body, or (b) support or sustain life, and (c) whose failure to perform when properly used in accordance with instructions for use provided in the labeling, can be reasonably expected to result in a significant injury of the user.

2. A critical component in any component of a life support device or system whose failure to perform can be reasonably expected to cause the failure of the life support device or system, or to affect its safety or effectiveness.

Product Specifications

	Specification	Material	Quantity
Iv	Red ：750mcd typ. Green ：1350mcd typ. Blue ：750mcd typ. @12mA/ Ta= 25°C; Tolerance ±10%		
λD	Red ：624nm typ. Green ：524nm typ. Blue ：466nm typ. @12mA/ Ta= 25° C; Tolerance ± 0.5nm		
Vf	Red ：1.8-2.2 V Green ：2.8-3.2 V Blue ：2.8-3.2 V @12mA/ Ta= 25°C; Tolerance ± 0.05V		
Resin	Clear	Epoxy Resin	
Carrier tape	EIA 481-1A specs	Conductive black tape	
Reel	EIA 481-1A specs	Conductive black	1000pc/reel
Label	IN standard	Paper	
Packing bag	220x240mm	Aluminum laminated bag/ no-zipper	One reel per bag
Carton	IN standard	Paper	Non-specified

Others:

Each immediate box consists of 5 reels. The 5 reels may not necessarily have the same lot number or the same bin combinations of Iv, λ_D and Vf. Each reel has a label identifying its specification; the immediate box consists of a product label as well.

ATTENTION: Electrostatic Discharge (ESD) protection

The symbol to the left denotes that ESD precaution is needed. ESD protection for GaP and AlGaAs based chips is necessary even though they are relatively safe in the presence of low static-electric discharge. Parts built with AlInGaP, GaN, or/and InGaN based chips are **STATIC SENSITIVE devices**. ESD precaution must be taken during design and assembly.

If manual work or processing is needed, please ensure the device is adequately protected from ESD during the process.

Label Specifications

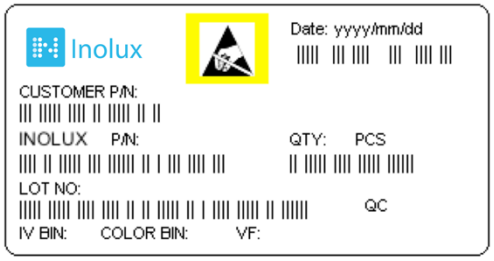

■ INolux P/N:

I N - P I 5 5 4 F C H - X X X X

Product	Package	Color	Customer Code
IN: INolux Corporation	PI55: 5.0 (L) x 5.0 (W) x1.6 (H) mm 4: 4-Pin Version	FCH: Full Color	XXXX: Customer Specific Code

Features

1. 5050 with integrated high quality constant current IC and RGB LED chip.
2. Built-in IC, with high precision of constant current and internal RGB chips spectral processing in advance.
3. Single line data transmission（return to zero code）.
4. Specific Shaping Transmit Technology - number of LED stacked is not restricted.
5. Cascading Enhancement Technology - any 2 LED spacing can be up to 10 meters
6. Data transfer rate of 800 kbp/s at 30 frames per second.
7. RGB output port PWM control can achieve 256 grey level adjustments
9. Upon powering up, IC performs self-inspection then lights connection on the pin B lamp.
10. SA-I Anti-interference patent technology for single line data transmission.
11. Built-in power supply reverse connect protection module, reversed power input will not damage the IC.

LED Characteristics

(T_a=-25°C, unless otherwise specified)

Light color	Wavelength (nm)	Light intensity (mcd)	Working current (mA)	Working voltage (V)
R	620-625	500-1000	12	1.8-2.2
G	520-525	1000-1700	12	2.8-3.2
B	465-470	500-1000	12	2.8-3.2

Recommended Operating Ranges

(T_a=-25°C, unless otherwise specified)

Parameter	Symbol	Min.	Typ.	Max	Unit	Test conditions
Supply voltage	*VDD*	-	5.2	-	V	-
R/G/B port pressure	*Vds,max*	-	-	26	V	-
DOUT drive capability	*IDOH*	-	49	-	mA	maximum source current
DOUT drive capability	*IDOL*	-	-50	-	mA	maximum sink current
High level input voltage	*VIH*	3.4	-		V	VDD=5.0V
Low level input voltage	*VIL*	-	-	1.6	V	VDD=5.0V
The frequency of PWM	*FPWM*	-	1.2	-	KHZ	-
Static power consumption	*IDD*	-	1	-	mA	-

Switching Characteristics

(T_a=-25°C, unless otherwise specified)

Parameter	Symbol	Min.	Typ.	Max	Unit	Test conditions
The speed of data transmission	*FDIN*	-	800	-	KHZ	
DOUT transmission delay	*TPLH*	-	-	500	ns	DIN→DOUT
	TRPHL	-	-	500	ns	
IOUT Rise/Drop Time	*Tr*	-	100	-	ns	VDS=1.5 IOUT=13mA
	Tf	-	100	-	ns	

Package Outline Dimension & Pin Configuration

Outline Dim.

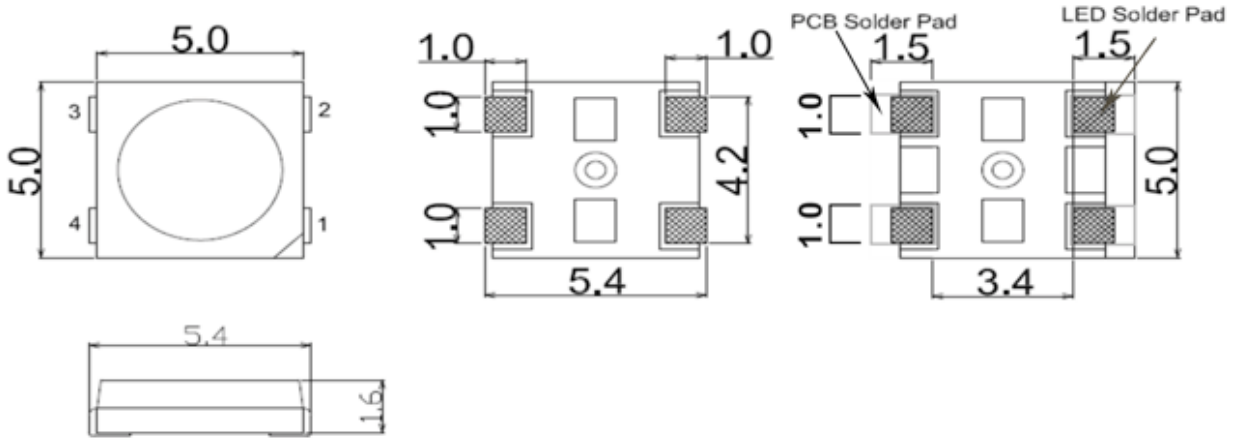

Pin Configuration

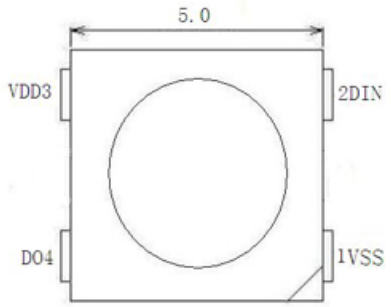

Soldering terminals may shift in the x, y direction. Unit: mm Tolerance: +/-0.1mm

PIN Description

Number	Symbol	Function Description
1	VSS	Ground
2	DIN	Display data cascaded input (800k bps)
3	VDD	LED and Logic Power Supply
4	DO	Display data cascaded output (800k bps)

Absolute Maximum Ratings

(T_a = 25 °C, V_{ss}=0V, unless otherwise specified)

Parameter	Symbol	Range	Unit
Logic supply voltage	V_{DD}	+3.5～+5.5	V
Logic input voltage	V_{IN}	V_{DD}+0.5	V
Operating temperature	T_{OPT}	−45 to +85	°C
Storage temperature	T_{STG}	−50 to +150	°C
ESD pressure	V_{ESD}	4K	V

Functional Description

The IN-PI554FCH sends signals in return to zero codes with a single-wire communication method.

When the power-on reset is completed, the IN-PI554FCH receives the data from the DIN pin.

When all the 24 bits of data have been received, IC no longer receive data, the DOUT port starts to forward the data to the next chip as its input data. The DOUT pin is held LOW before the data forwarding. The three PWM output ports, OUTR, OUTG and OUTB, drive Duty ratio output in a 0.6-ms period corresponding to the 24-bit data received before. If the input data from the DIN pin is a RESET code, the IN-PI554FCH will drive the newest received 24-bit data for display. When the reset code is completed, the IN-PI554FCH will start receive the new 24-bit data. When 24 bits of data have been received, the IN-PI554FCH will forward the data through the DOUT pin. Before the RESET signal is received, the output at the OUTR, OUTG and OUTB pins will remain unchanged. When a low level RESET code longer than 80μs is received, the IN-PI554FCH will drive Duty ratio output corresponding to the newest 24-bit data received The IN-PI554FCH employs an automatic shaping-forwarding technique, so the number of the cascaded chips is not limited by the signal transfer, and is only limited by the panel refresh speed. For example, in a 1024-chip cascaded design with the panel refresh time of 1024X3X8 X 1.25（us）=30ms, no flickering will appear.

Timing Waveforms

1. Input Code

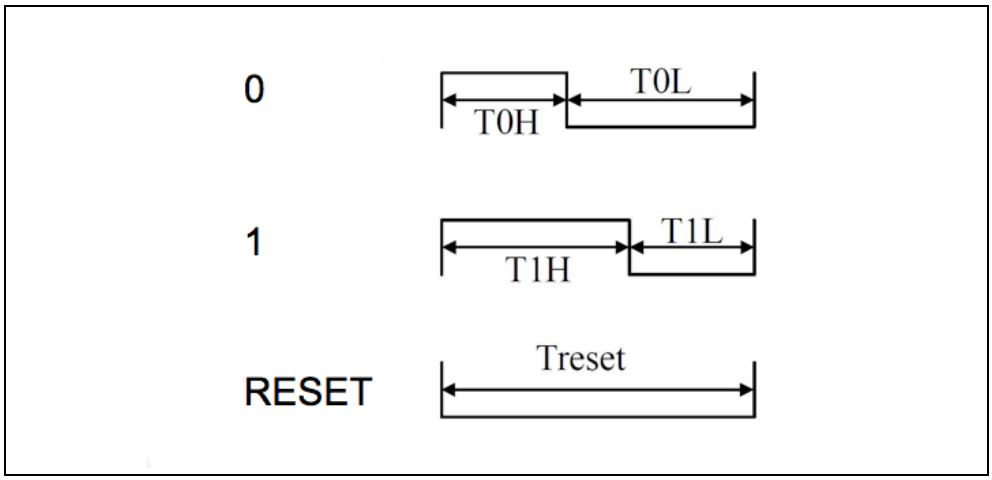

2. The data transmission time (TH+TL=1.25μs±600ns):

Name	Description	Typ. value	error
T0H	0 code, high level time	0.3μs	±0.15μs
T1H	1 code, high level time	0.6μs	±0.15μs
T0L	0 code, low level time	0.9μs	±0.15μs
T1L	1 code, low level time	0.6μs	±0.15μs
Reset	Reset code, low level time	80μs	

3. Connection Scheme

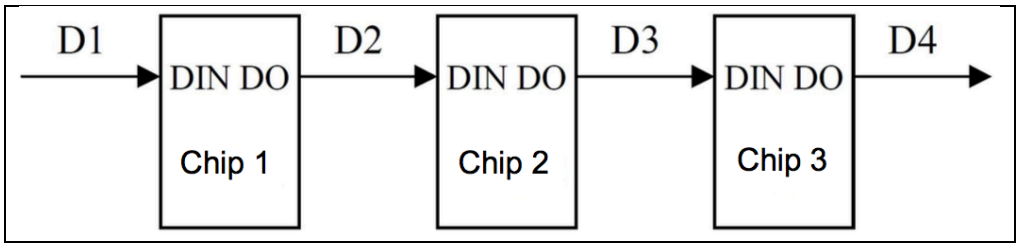

4. Data Transfer Format

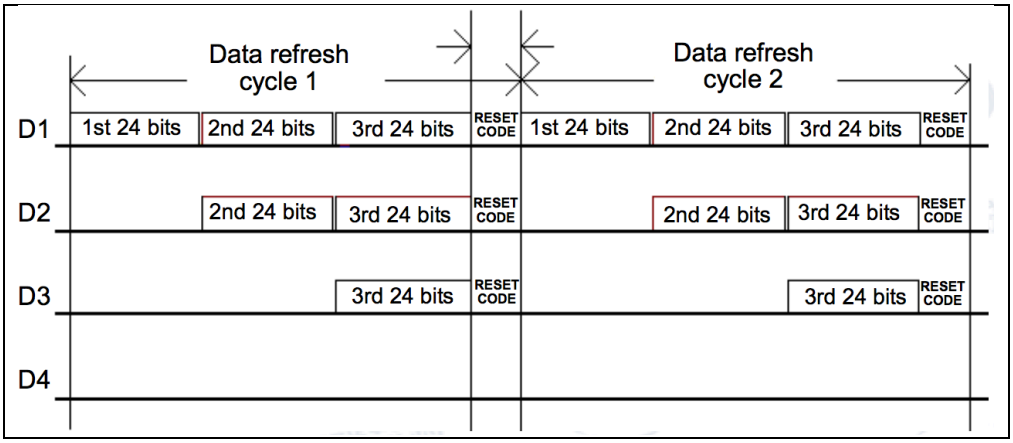

5. 24-bit data format

Note: The data is sent in the sequence of GRB, and the MSB is sent first.

Constant Current Characteristic

With excellent constant current characteristics,

(1) The differences of current between Channel is less than ±1.5%

(2) The differences of current between Chip is less than ±3%

(3) When the voltage of the load change, the output current is not affected, as shown in the figure below

(4) Below output port of the current I_{out} and add on the port voltage V_{ds} curve relationship.

The smaller the I_{out} current, the smaller in the condition of constant current need of V_{ds}.

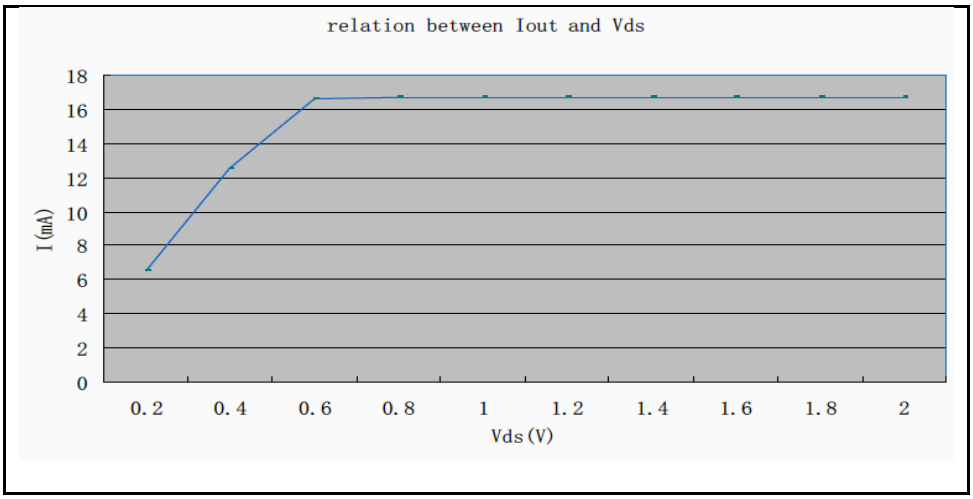

Typical Application circuit diagram

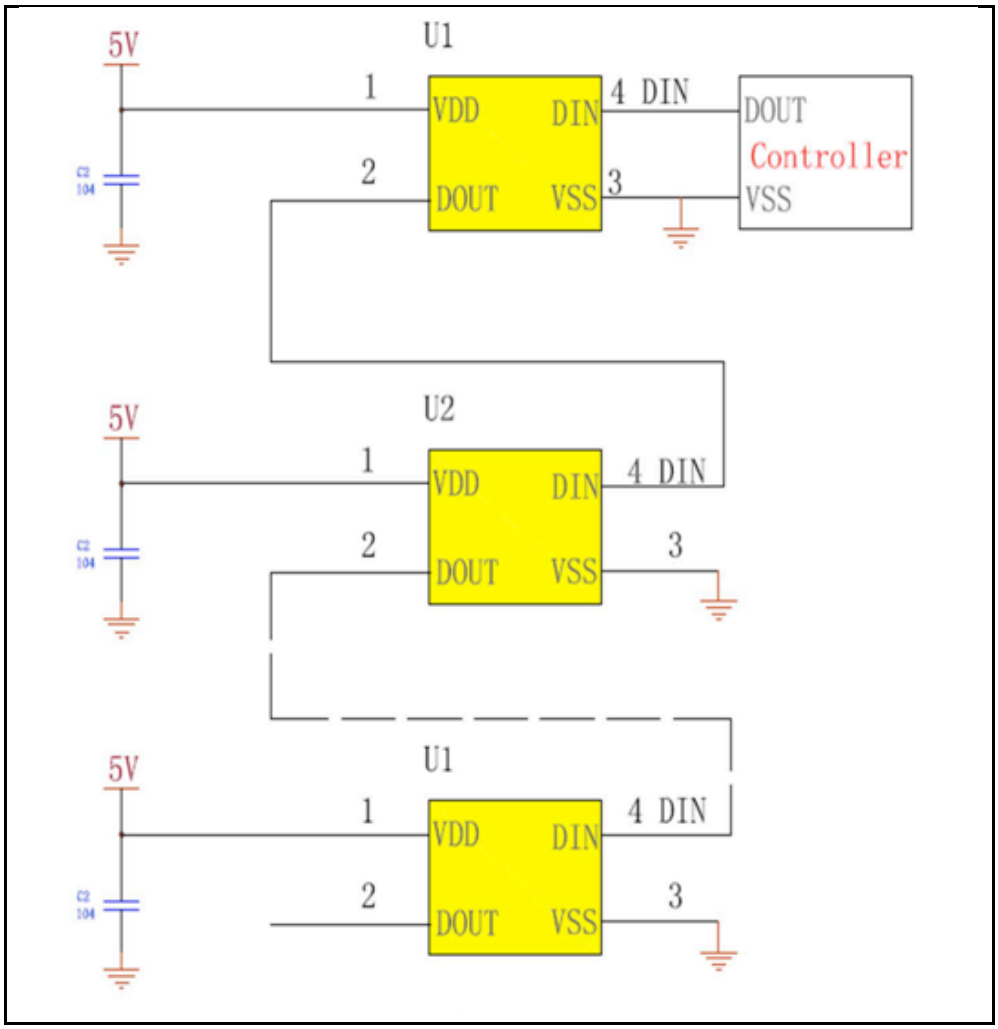

LED Performance Graph

Typical Relative Luminous Flux vs. Forward Current

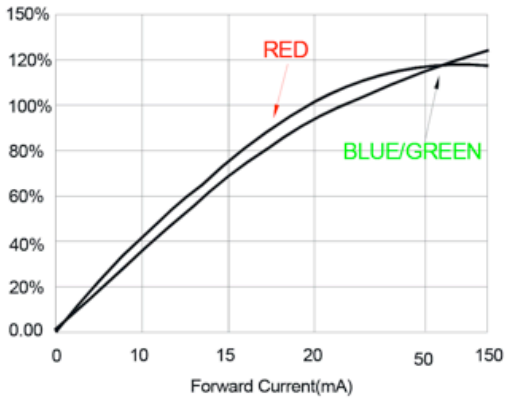

Forward Voltage vs. Forward Current

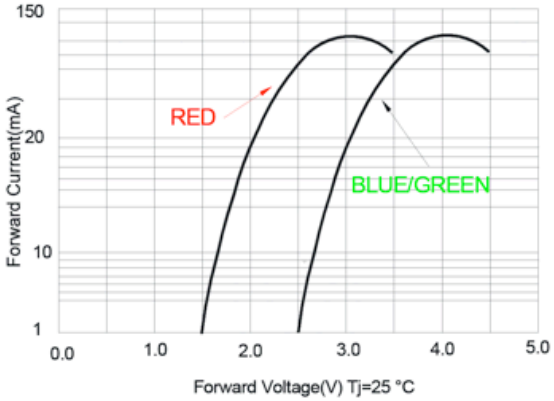

Thermal Pad Temperature vs. Relative Light Output

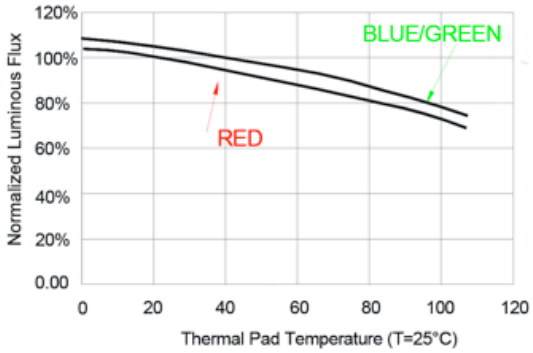

Wavelength Characteristics

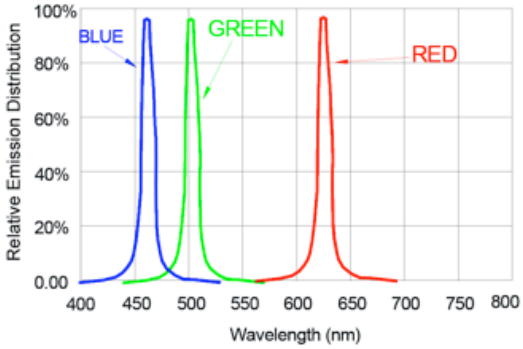

Thermal Pad Temperature vs. Forward Current

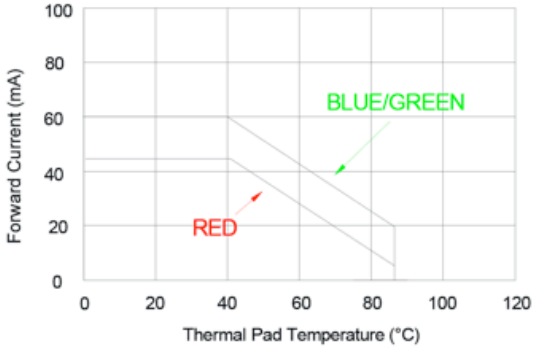

Typical Radiation Pattern 120°

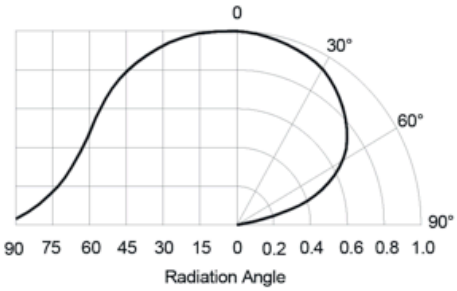

Precautions

Please read the following notes before using the product:

1. Storage

1.1 Do not open moisture proof bag before the products are ready to use.

1.2 Before opening the package, the LEDs should be kept at 30℃ or less and 80%RH or less.

1.3 The LEDs should be used within a year.

1.4 After opening the package, the LEDs should be kept at 30℃ or less and 60%RH or less.

1.5 The LEDs should be used within 24 hours (1 day) after opening the package.

1.6 If the moisture adsorbent material has fabled away or the LEDs have exceeded the storage time, baking treatment should be performed using the following conditions. Baking treatment: 60±5℃ for 24 hours.

2. Soldering Condition

Recommended soldering conditions:

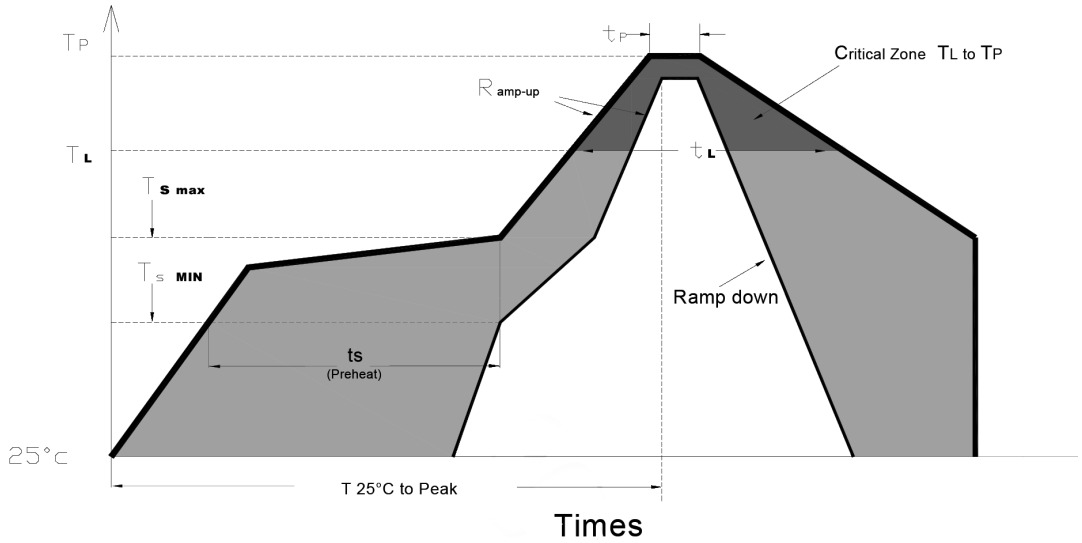

Profile Feature	Lead-Free Solder
Average Ramp-Up Rate (Ts_{max} to Tp)	3℃/second max.
Preheat: Temperature Min (Ts_{min})	150℃
Preheat: Temperature Min (Ts_{max})	200℃
Preheat: Time (ts_{min} to ts_{max})	60-180 seconds
Time Maintained Above: Temperature (T_L)	217 ℃
Time Maintained Above: Time (t_L)	60-150 seconds
Peak/Classification Temperature (T_P)	240 ℃
Time Within 5℃ of Actual Peak Temperature (tp)	<10 seconds
Ramp-Down Rate	6℃/second max.
Time 25 ℃ to Peak Temperature	<6 minutes max.

Note: Excessive soldering temperature and / or time might result in deformation of the LED lens or catastrophic failure of the LED.

3. Soldering Iron

Each terminal is to go to the tip of soldering iron temperature less than 260℃ for 5 seconds within once in less than the soldering iron capacity 25W. Leave two seconds and more intervals, and do soldering of each terminal. Be careful because the damage of the product is often started at the time of the hand solder.

4. Repairing

Repair should not be done after the LEDs have been soldered. When repairing is unavoidable, a double-head soldering iron should be used (as below figure). It should be confirmed beforehand whether the characteristics of the LEDs will or will not be damaged by repairing.

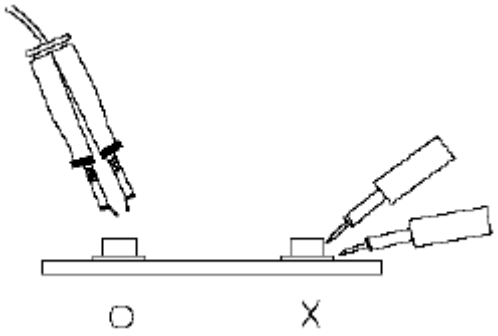

5. Caution in ESD

Static Electricity and surge damages the LED. It is recommended to use a wristband or anti-electrostatic glove when handling the LED. All devices, equipment and machinery must be properly grounded.

Revision History

Changes since last revision	Page	Version No.	Revision Date
Initial release	-	1.0	12-21-2015
Update optical electrical characteristics		2.0	06-10-2016
Update data transmission time / intensity level/ handling		2.1	10-20-2016
Update intensity level		2.2	10-31-2016